ResearchGate

See discussions, stats, and author profiles for this publication at: https://www.researchgate.net/publication/259865492

Reinforced Concrete Force Visualization and Design Using Bilinear Truss-Continuum Topology Optimization

Article *in* Journal of Structural Engineering · January 2013

DOI: 10.1061/(ASCE)ST.1943-541X.0000692

CITATIONS
28

READS
1,317

3 authors:

Andrew T Gaynor
Army Research Laboratory
15 PUBLICATIONS **334** CITATIONS

SEE PROFILE

Cristopher Dennis Moen
Virginia Polytechnic Institute and State University
78 PUBLICATIONS **745** CITATIONS

SEE PROFILE

James K Guest
Johns Hopkins University
90 PUBLICATIONS **2,703** CITATIONS

SEE PROFILE

Some of the authors of this publication are also working on these related projects:

Project Topology Optimization with Additive Manufacturing Constraints View project

Project Woven Material Modeling and Microstructure Design View project

All content following this page was uploaded by Andrew T Gaynor on 13 July 2015.

The user has requested enhancement of the downloaded file.

Reinforced Concrete Force Visualization and Design Using Bilinear Truss-Continuum Topology Optimization

Andrew T. Gaynor, S.M.ASCE[1]; James K. Guest, A.M.ASCE[2]; and Cristopher D. Moen, M.ASCE[3]

Downloaded from ascelibrary.org by JOHN HOPKINS UNIVERSITY on 05/08/13. Copyright ASCE. For personal use only; all rights reserved.

Abstract: A new force visualization and design tool employing hybrid topology optimization is introduced for RC and prestressed concrete structural members. The optimization scheme couples a minimum compliance (maximum stiffness) objective function with a hybrid truss-continuum ground structure that can generate a strut-and-tie model for any general concrete member, loading, and set of boundary conditions. The truss ground structure represents discrete steel reinforcing bars (tensile load paths) that can be sized based on axial forces output directly by the optimization routine, whereas the continuum elements simulate concrete compression struts. This separation of compressive and tensile load-carrying elements is achieved through bilinear elastic models with an orthotropic constitutive relationship for the continuum. Examples are provided demonstrating the potential value of the optimization tool to RC design. Reinforcing layouts that can minimize cracking and reduce steel quantities when compared with traditional designs are provided for a prismatic beam, a hammerhead pier, a stepped beam with a cutout, and the local anchorage zone of a prestressed concrete block. A minimum length scale constraint is employed to control complexity of the strut-and-tie topology, accommodating design solutions that balance material savings, structural performance, and constructability. **DOI: 10.1061/(ASCE)ST.1943-541X.0000692.** *© 2013 American Society of Civil Engineers.*

CE Database subject headings: Optimization; Struts; Reinforced concrete; Prestressed concrete; Structural design.

Author keywords: Structural optimization; Topology optimization; Strut-and-tie model; Reinforced concrete; Prestressed concrete; Force visualization.

Introduction

RC is a complex composite material that continues to challenge those researchers attempting to describe its behavior with mechanics-based models. In the late 1800s, Wilhem Ritter and Emil Mörsch developed a rational engineering approach to circumvent these analysis complexities (Ritter 1899; Mörsch 1909). The idea was to assume a cracked, RC beam behaves like a truss. This truss analogy, known today as a strut-and-tie model, provides a convenient visualization of force flow and identifies required-reinforcing steel locations that can be used to design and detail a concrete member.

A drawback of early concrete truss models was the arbitrary nature with which they could be formulated and the lack of scientific theory to support the practical idea developed by Ritter and Mörsch. The scientific support for cracked, RC truss models came several decades later with research by Marti, who established a technical foundation for the truss model concept by relating truss behavior to a lower-bound plasticity theory (Marti 1980). Marti and others concluded that an optimum concrete truss model could be achieved by locating the compressive struts and tension ties coincident with the elastic stress trajectories in a member, and that higher ductility and improved structural performance at an ultimate limit state could be achieved with a stiffer truss. The engineering judgment required to obtain an accurate truss model was viewed as a drawback of the design approach, and Marti recommended future research on computational tools that could automate the identification of viable strut-and-tie geometries.

The momentum from Marti's work, in combination with experimental and analytical work by Collins and Mitchell (1980) on truss models for shear and torsion, led to a groundbreaking set of design guidelines for truss models proposed by Jörg Schlaich and his colleagues at the University of Stuttgart (Schlaich et al. 1987). Schlaich states that the stiffest truss model is the one that will produce the safest load-deformation response because limiting truss deflection prevents large plastic deformations in the concrete. Maximizing stiffness correlates mathematically to minimizing reinforcing steel's elastic strain energy. However, Schlaich acknowledges that selecting the optimum truss model may be difficult with the energy criterion, requiring engineering intuition that has contributed to past structural failures.

RC design guidelines employing strut-and-tie models were introduced into the Canadian Concrete Design Code in 1984 [Canadian Standards Association (CSA) Technical Committee A23.3 1984], followed by European practice (Comité Euro-International du Béton 1993), the AASHTO LRFD bridge code (AASHTO 1994), and finally the American Concrete Institute (ACI) (2002) building code. However, the method's widespread use is currently stymied by a lack of mechanics-based tools for identifying the force flow and visualizing the truss shape needed in design.

It is the goal of the research described herein to create a new automated tool for visualizing the flow of forces in RC and prestressed concrete structural members. The approach couples truss and continuum topology optimization methodologies to create a hybrid routine that leads to strut-and-tie solutions consistent

[1]Graduate Student, Dept. of Civil Engineering, Johns Hopkins Univ., Baltimore, MD 21218. E-mail: agaynor1@jhu.edu

[2]Associate Professor, Dept. of Civil Engineering, Johns Hopkins Univ., Baltimore, MD 21218 (corresponding author). Email: jkguest@jhu.edu

[3]Assistant Professor, The Charles E. Via, Jr. Dept. of Civil and Environmental Engineering, Virginia Tech, Blacksburg, VA 24061. E-mail: cmoen@vt.edu

Note. This manuscript was submitted on December 20, 2011; approved on July 26, 2012; published online on August 11, 2012. Discussion period open until September 1, 2013; separate discussions must be submitted for individual papers. This paper is part of the ***Journal of Structural Engineering***, Vol. 139, No. 4, April 1, 2013. ©ASCE, ISSN 0733-9445/2013/4-607–618/$25.00.

J. Struct. Eng. 2013.139:607-618.

with Schlaich's hypothesis that placing reinforcing steel consistent with the stiffest truss results in superior structural performance over traditional designs, i.e., reduced crack widths and improved capacity. Force paths (topologies) can be identified and studied for any general concrete domain and with any loading and boundary conditions, and the tensile forces in the reinforcing steel are readily available to a designer for sizing. With the force paths defined, a designer may then apply existing code-based strut-and-tie design provisions to evaluate ductility and ultimate strength. An introduction to truss and continuum topology optimization from the perspective of RC design is provided in the subsequent section, followed by a step-by-step implementation of the hybrid truss-continuum topology optimization approach. Included in the discussion are examples of force flow topologies for a concrete beam, a hammerhead pier, a deep beam with a cutout, and a prestressed concrete block.

RC and Topology Optimization

Topology Optimization Background and Formulation

Recent advances in optimization algorithms, and specifically growth in the field of topology optimization, have led to a new family of methods for identifying RC truss models consistent with the rules outlined by Schlaich for optimal performance in service and at an ultimate limit state. In topology optimization, the design domain (structural component) is discretized with structural elements, typically truss or continuum (solid) elements, with the goal of identifying the concentration of material in each element (Fig. 1). Elements receiving little or no material by the optimizer at convergence are deemed structurally insignificant and removed from the structural domain in postprocessing (Ohsaki and Swan 2002; Bendsøe and Sigmund 2003).

Following the guidelines of Schlaich, the objective is to design a truss topology with maximal stiffness. This may be equivalently formulated as a minimum compliance problem, in which the goal is to minimize the external work done by the applied loads (and strain energy stored in the structure), for a limited volume of material, expressed in general as follows:

$$\begin{aligned} &\min_{\rho} f(\boldsymbol{\rho}) = \mathbf{F}^{\mathrm{T}}\mathbf{d} \\ &\text{subject to: } \mathbf{K}(\boldsymbol{\rho})\,\mathbf{d} = \mathbf{F} \\ &\qquad \sum_{e\in\Omega} \rho^e\, v^e \le V \\ &\qquad 0 \le \rho^e \le \rho^e_{\max} \forall\ e \in \Omega \end{aligned} \tag{1}$$

where design variable vector $\boldsymbol{\rho}$ = encoding of the material concentration (the structural design), ρ^e = material concentration in element e (e.g., the cross-sectional area of truss element e), $\mathbf{F}$ = applied nodal loads, $\mathbf{d}$ = nodal displacements, v^e = element volume for unit ρ^e (element length for truss structures), V = available volume of material in the design domain Ω, and $\rho^e_{\max}$ = design variable upper bound. The global stiffness matrix, $\mathbf{K}$, is assembled ($\underset{e\in\Omega}{\mathrm{A}}$) from element stiffness matrices $\mathbf{K}^e$ as follows:

$$\mathbf{K}(\boldsymbol{\rho}) = \underset{e\in\Omega}{\mathrm{A}}\, \mathbf{K}^e(\rho^e), \quad \mathbf{K}^e(\rho^e) = [(\rho^e)^{\eta} + \rho^e_{\min}]\mathbf{K}^e_0 \tag{2}$$

where $\mathbf{K}^e_0$ = element stiffness matrix for unit ρ^e, $\rho^e_{\min}$ = small positive number to maintain positive definiteness of the global stiffness matrix, and the exponent parameter, $\eta \ge 1$ = optional penalty term that may be used to drive solutions to the design variable bounds (Bendsøe 1989). This penalization approach is known as the solid isotropic material with penalization (SIMP) method and is widely used in the topology optimization community.

The optimization problem in Eq. (1) is solved using gradient-based optimizers, chosen as the method of moving asymptotes (MMA) (Svanberg 1987) in this work. Such optimizers are guided by design sensitivities, or derivatives with respect to the design variables. Minimum compliance sensitivities may be found using the adjoint method or direct differentiation, and take the well-known form of scaled-elemental strain energies

$$\frac{\partial f}{\partial \rho^e} = -\eta(\rho^e)^{\eta-1}\mathbf{d}^{eT}\mathbf{K}^e_0\mathbf{d}^e \tag{3}$$

where $\mathbf{d}^e$ = elemental displacement vector of element e. The reader is referred to Arora (1997) and Bendsøe and Sigmund (2003) for sensitivity analysis background information.

Truss Topology Optimization

Truss topology optimization begins with a densely meshed domain, referred to as ground structure [Fig. 1(a)], and cross-sectional areas are then optimized. Following convergence, members having (near-) zero area are removed to identify the final optimal topology and corresponding distribution of cross-sectional areas (e.g., Bendsøe et al. 1994). Following this approach, Biondini et al. (1999) and Ali and White (2001) solved minimum compliance formulations using mathematical programming to develop concrete truss models consistent with the elastic stress trajectories in a general concrete domain. Ali and White demonstrated with nonlinear finite-element modeling to the collapse of short, RC cantilevers that ultimate strength increases as truss stiffness increases, an important result supporting Schlaich's hypothesis that was subsequently confirmed with experimental results by Kuchma et al. (2008).

In typical truss topology optimization, the cross-sectional areas ρ^e are considered unpenalized continuous variables ($\eta = 1$) with

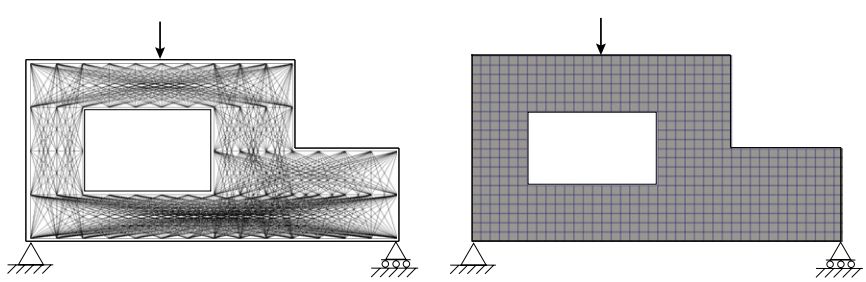

(a) Truss elements (b) Four-node quadrilateral elements

Fig. 1. Topology optimization design domain with hole discretized using (a) truss elements and (b) four-node quadrilateral elements

J. Struct. Eng. 2013.139:607-618.

Downloaded from ascelibrary.org by JOHN HOPKINS UNIVERSITY on 05/08/13. Copyright ASCE. For personal use only; all rights reserved.

relaxed upper bound $\rho^e_{\max}$. Under these conditions, it can be shown that minimum compliance optimization yields a topology of uniform strain-energy density and thus a uniformly stressed design (Bendsøe et al. 1994). This means the target volume V specified by the designer is arbitrary and cross-sectional areas may be uniformly scaled to satisfy a stress constraint, such as the reinforcing steel-yield stress. This may be extended to the case in which truss members have different properties in both tension and compression (Achtziger 1996; Rozvany 1996).

The minimum compliance topology-optimization truss is illustrated for a RC deep beam shown in Fig. 2. The topologies are overlaid on experimental testing data indicating crack paths, and therefore principal tension trajectories for this beam. The traditional truss model and reinforcing layout places steel near the bottom of the deep beam [Fig. 2(a)], which is an optimal location at midspan; however, it is less efficient at providing resistance to principal tension near the supports where wide diagonal cracks may develop under a load as shown. The minimum compliance truss model [Fig. 2(b)] helps the designer understand where the cracks will form, in this case showing that inclined-steel reinforcement [tension ties in Fig. 2(b)] should be provided to bridge to better resist the principal tension cracks.

One of the drawbacks of truss topology optimization is that solutions are dependent on the ground structure chosen by the designer. This includes nodal locations and element connectivity, as the designer has essentially restricted potential force paths a priori. Using a very fine mesh with small nodal spacing and extensive element connectivity [e.g., connecting every node together as shown in Fig. 1(a)] offers the most design freedom and allows topologies to approximate curved trajectories [Fig. 2(b)]. By using a coarser mesh and/or simpler connectivity, the designer restricts the design space and subsequently global optima will underperform those found with more refined ground structures, i.e., they will have higher compliance and hence lower stiffness. The advantage of using coarse meshes, however, is that optimal topologies are typically less complex and thus easier to construct. This tradeoff between stiffness and constructability will be revisited in the examples section, Examples of Topology Optimization for RC.

Continuum Topology Optimization

Continuum topology optimization offers an alternative free-form approach to visual force flow. The domain is discretized with finite elements [four-node quadrilateral elements shown in Fig. 1(b)] and the goal is to determine whether an element contains material, i.e., is a solid ($\rho^e = \rho^e_{\max} = 1$) or a void ($\rho^e = 0$). The resulting connectivity of the solid elements defines the optimized structure. In the application to RC-force visualization, the solid phase represents load-carrying material (concrete or steel), while the void phase in the continuum model indicates locations of background concrete that are not part of the force model.

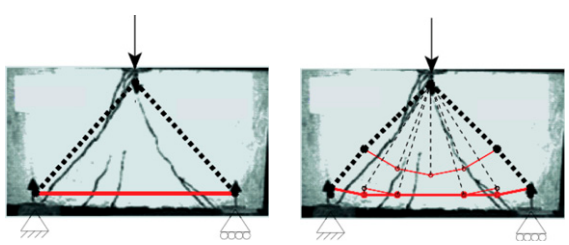

(a) Traditional concrete truss model

(b) Minimum compliance truss model

Fig. 2. (a) Traditional concrete truss model and (b) minimum compliance truss model derived with topology optimization; dashed lines = compression carried by concrete; solid lines = represent tension carried by the reinforcing steel (Nagarajan and Pillai 2008 with permission from Multi-Science Publishing Co. Ltd.)

To enable its use with gradient-based optimizers, the binary (solid-void) condition on ρ^e in is relaxed and solutions are steered toward 0–1 distributions using the SIMP penalty term $\eta > 1$ in Eq. (2) (e.g., $\eta = 3$). It is well known that this approach leads to numerical instabilities of checkerboard patterns and solution mesh dependency if the design space is not restricted to prevent them [see Sigmund and Peterson (1998) for review]. These issues are circumvented herein by imposing a minimum-length scale (minimum thickness) on load-carrying members. This not only numerically stabilizes the formulation, it has the added benefit of providing the designer a tool for influencing constructability, as requiring larger features tends to produce simpler topologies. Minimum-length scales can be imposed on a topology using an efficient projection-based algorithm (Guest et al. 2004; Guest 2009), in which an auxiliary variable field $\boldsymbol{\phi}$ serves as the independent optimization variable and is mapped onto the finite element space to determine the topology, meaning finite element variables $\boldsymbol{\rho}$ are a function of $\boldsymbol{\phi}$. This mapping is rigorously constructed such that the minimum-length scale of the designed topological features is naturally controlled at a negligible added computational cost. The reader is referred to Guest et al. (2011) for details on numerical implementation of the algorithm used herein.

Several researchers have explored the use of continuum topology optimization as a tool for RC analysis and design. Liang et al. (2000b) implemented a heuristic plane-stress topology optimization approach, commonly referred to as evolutionary structural optimization (ESO), to derive concrete truss model shapes for common cases including a deep beam and a corbel. Kwak and Noh (2006) and Leu et al. (2006) employed similar ESO-based algorithms. Bruggi (2009) solved two-dimensional (2D) and three-dimensional (3D) strut-and-tie design problems using a gradient-based topology optimization algorithm with heuristic sensitivity filtering to improve solution efficiency, while Victoria et al. (2011) used a heuristic optimality criterion-updating scheme allowing various moduli for tension and compression phases. More recently, Amir and Bogomolny (2011) and Bogomolny and Amir (2012) used material-dependent elastoplastic models to specifically enhance RC performance at an ultimate limit state.

The primary advantage of the continuum approach is the free-form design evolution that identifies high-performance topologies consistent with the force path in a structural component. Unlike truss topology optimization, in which the designer selects node locations and element orientations of the force flow model a priori, it is the optimizer itself that identifies these locations and orientations in continuum topology optimization. Disadvantages are that the tension regions are not defined as discrete bars, requiring postprocessing of the continuum results to produce truss representations to size concrete reinforcement. Continuum topologies, as they are generated in a free-form manner, are also typically more complex and therefore may be more difficult to construct than those found directly using truss topology optimization. As will be shown, the geometric restriction methods (minimum-length scale) discussed previously provide a means for controlling this complexity.

Examples of Topology Optimization for RC

A traditional linear elastic topology optimization approach is demonstrated for several RC design examples. These examples will

J. Struct. Eng. 2013.139:607-618.

Downloaded from ascelibrary.org by JOHN HOPKINS UNIVERSITY on 05/08/13. Copyright ASCE. For personal use only; all rights reserved.

provide baseline solutions that can be compared with the hybrid model results discussed in the manuscript. For the truss topologies, solid lines represent tension (steel) ties and dashed lines represent the compressive struts (as in Fig. 2). Line thickness is proportional to axial force and therefore the required cross-sectional area for the steel tension ties. In the continuum representations, the solid black features represent the force flow topology, i.e., the load-carrying concrete and steel ties. A single isotropic, linear elastic material model is assumed for both the concrete and the steel. Continuum examples use four-node quadrilateral plane-stress elements. Domain dimensions and loads are given in relative (unitless) measures.

Simply Supported Beam

The design domain for a RC beam with a point load is shown in Fig. 3(a) along with a typical strut-and-tie model in Fig. 3(b). The topology-optimized truss and continuum models are shown in Figs. 3(c and d), respectively, with the truss solution achieving a uniformly stressed state as expected. These solutions illustrate that the maximum elastic stiffness (minimum compliance) can be achieved by placing the reinforcing steel orthogonal to the compressive stress trajectories. This design philosophy is similar to the practice of providing inclined shear stirrups to bridge diagonal cracks (MacGregor 1992).

As previously mentioned, one of the disadvantages of the truss approach is that solutions are mesh dependent. In selecting a ground structure, the designer limits the potential force flow paths a priori. Fig. 4, for example, shows three different ground structures containing a number of nodes ranging from 10 (coarse) to 85 (fine) in a lattice format. The optimized topology found using the fine ground structure closely resembles the principal stress trajectories, and consequently offers a 22% improvement in stiffness and reduces required steel quantities by an estimated 14% over the solution found using the coarse mesh. The trade off, however, is constructability, as the simpler topology is likely easier to construct. Ultimately, the decision is left to the designer to balance the cost of material and labor, while topology optimization offers a tool for exploring this trade-off.

Deep Beam with a Cutout

RC designs can be readily obtained with topology optimization for complex domains such as the deep beam with openings example shown in Fig. 5(a). The minimum compliance design in this case results in a reinforcing layout that does not require stirrups in the confined space under the hole, simplifying construction. Also, Figs. 5(c and d) show that there is tension in the lower-left corner of the beam, below the cutout, which could result in splitting cracks from the corner of the hole to the edge of the beam. A designer may miss this potentially detrimental behavior with a traditional strut-and-tie solution [Fig. 5(b)]. A drawback of the truss solution [Fig. 5(c)] is the lack of reinforcement over the left support where tensile stresses may develop as a result of bearing. This will be revisited with the hybrid model.

Hammerhead Bridge Pier

Hammerhead bridge piers are widely used and typically designed with the truss model shown in Fig. 6(b). Vertical shear stirrups are spaced evenly across the pier cap with a top mat of reinforcing steel to control cracking at the girder bearing line. The minimum compliance truss and continuum models in Figs. 6(c and d) demonstrate that for the loading case considered, the shear stirrups do not coincide with the internal tensile-force trajectories; instead, draped reinforcing steel or posttensioning would be a more appropriate design solution.

Fig. 7 illustrates the potential benefits of imposing minimum-length scale on the continuum structural members. Increasing the required minimum strut-and-tie thicknesses simplifies the topology and reduces the number of designed steel ties from four draped [Fig. 7(a)] to three (nearly) straight [Fig. 7(b)] to two straight [Fig. 7(c)] ties in each half of the pier. With direct control over the length

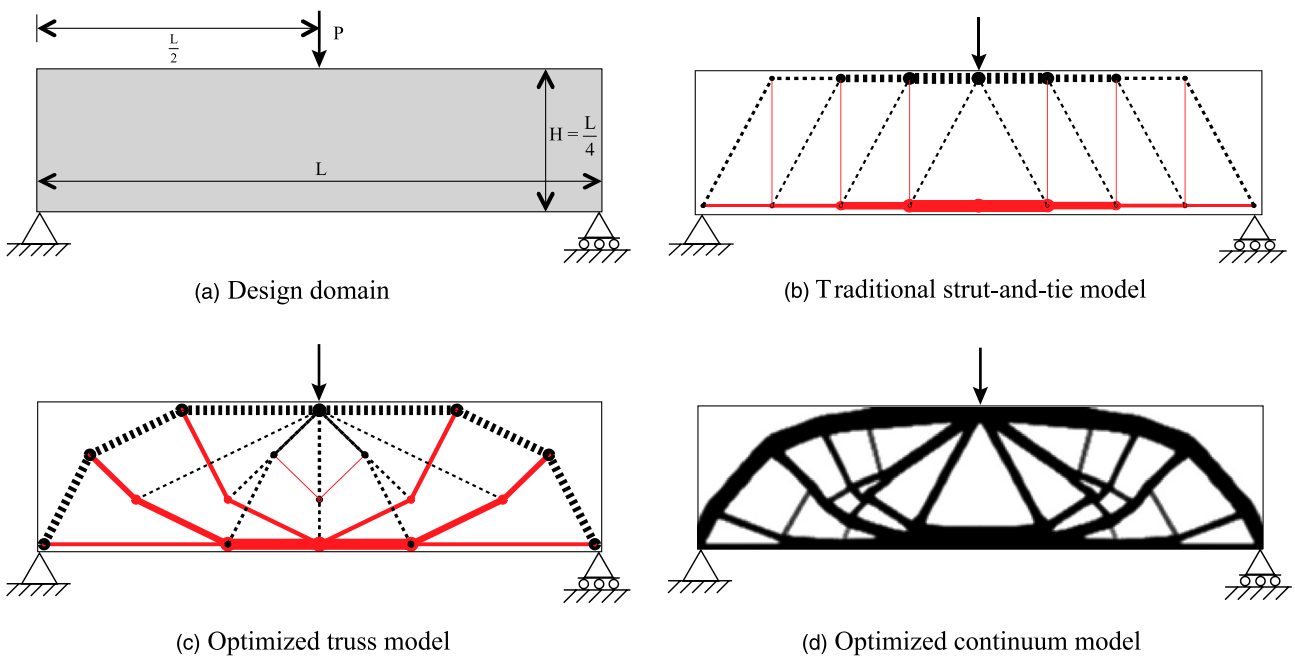

(a) Design domain

(b) Traditional strut-and-tie model

(c) Optimized truss model

(d) Optimized continuum model

Fig. 3. Force visualization for RC simply supported beam: (a) design domain; (b) traditional truss model; (c) topology-optimized truss model; (d) topology-optimized continuum model; (b) and (c) solid lines indicate tension (steel) members; dashed lines compression members, with line thickness indicating relative axial force

J. Struct. Eng. 2013.139:607-618.

Downloaded from ascelibrary.org by JOHN HOPKINS UNIVERSITY on 05/08/13. Copyright ASCE. For personal use only; all rights reserved.

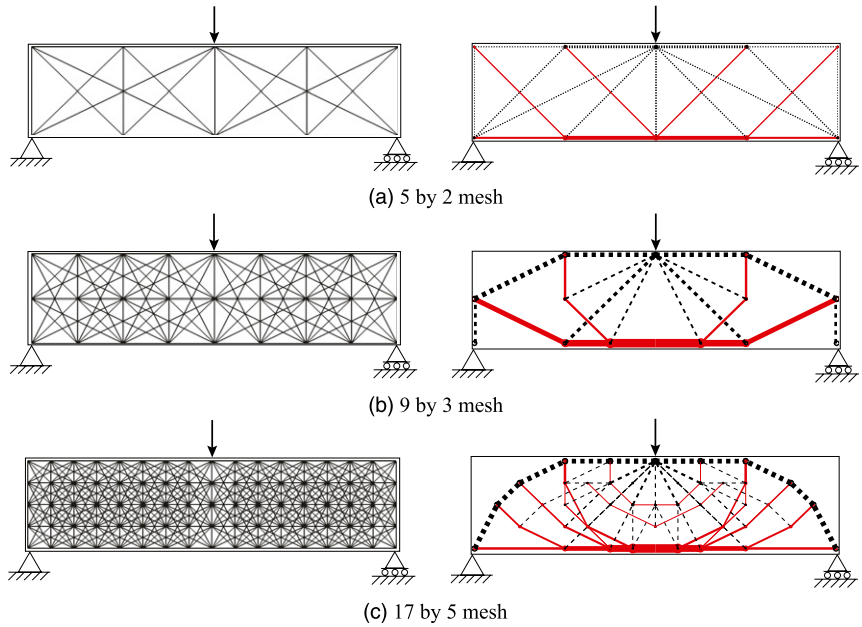

Fig. 4. Truss solutions using various ground structures having normalized compliances of (a) 1.000 for a 5×2 node mesh; (b) 0.792 for a 9×3 node mesh; (c) 0.779 for a 17×5 node mesh

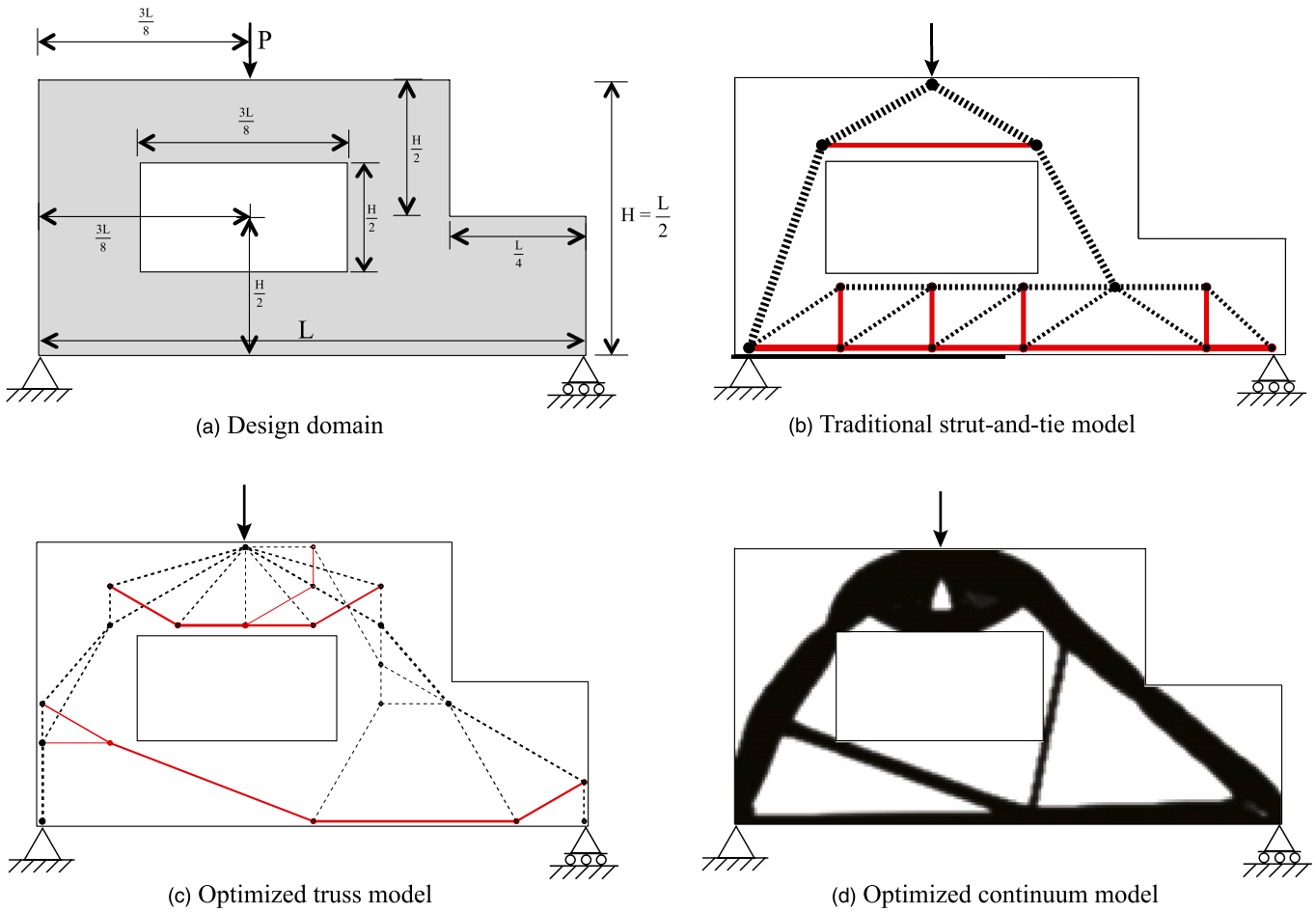

Fig. 5. Deep beam with cutout via topology optimization: (a) design domain; (b) traditional truss model; (c) topology-optimized truss model; (d) topology-optimized continuum model

J. Struct. Eng. 2013.139:607-618.

Downloaded from ascelibrary.org by JOHN HOPKINS UNIVERSITY on 05/08/13. Copyright ASCE. For personal use only; all rights reserved.

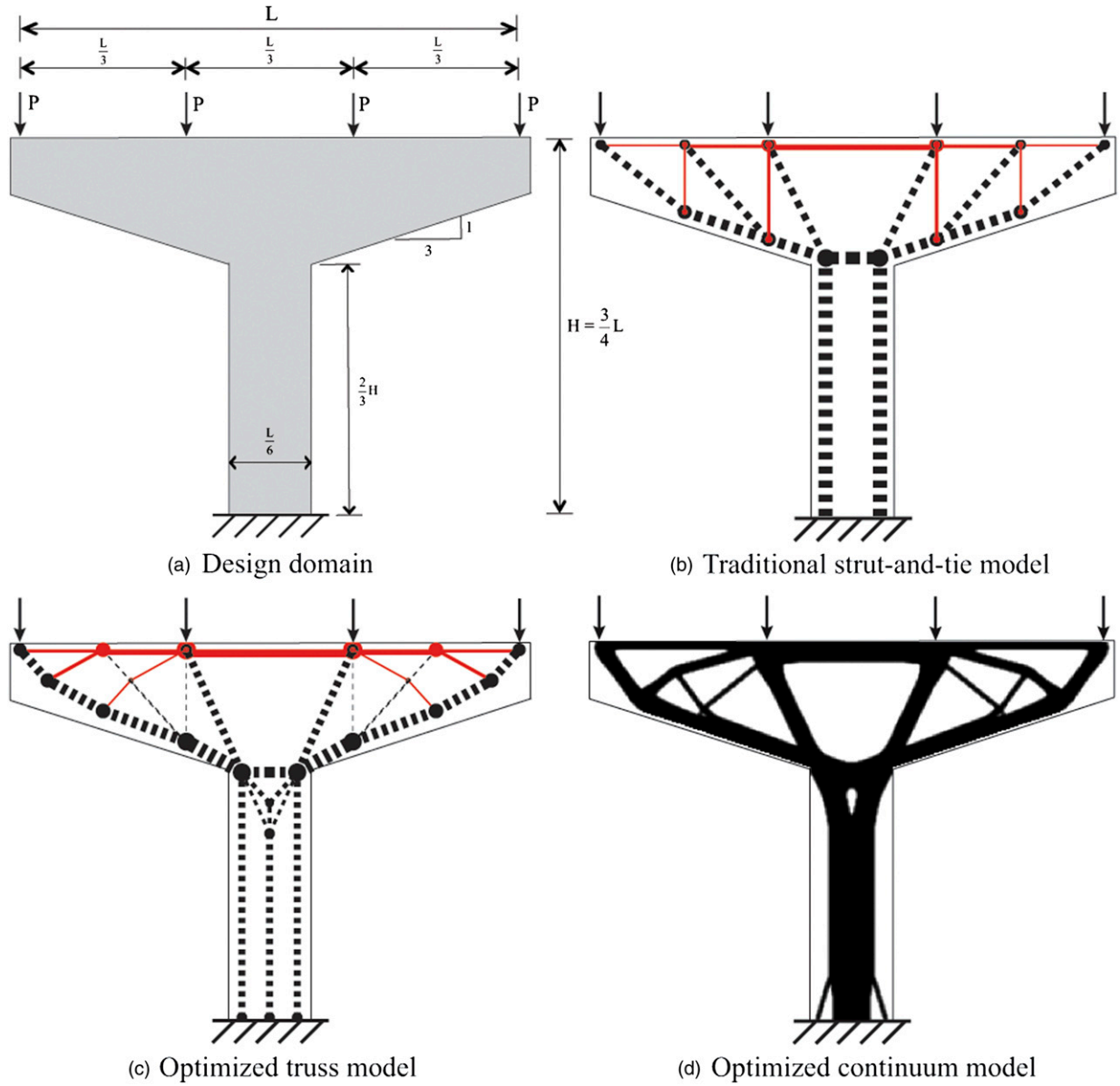

Fig. 6. Hammerhead pier supporting four girder lines with topology optimization: (a) design domain; (b) traditional truss model; (c) topology-optimized truss model; (d) topology-optimized continuum model

scale, a designer may generate a suite of solutions in which structural performance and constructability are balanced.

Motivation for a Hybrid Truss-Continuum Topology Model

The results presented in the previous section are consistent with those reported in the literature. Optimized topologies largely follow the principal stress trajectories even for complex domains treated in Biondini et al. (1999), Ali and White (2001), and Bruggi (2009). While solutions found using truss and continuum topology optimization follow these general trends, there are distinct differences in terms of solution stiffness, as quantified by the objective function, and constructability between the two approaches.

The free-form nature of continuum topology optimization is evident as the presented force trajectories may take any shape, have varying thickness, and/or connect with other members at any angle. In this sense, the optimizer selects both the locations of the nodes of the force-transfer topology and also the corresponding flow paths. This design freedom enhances solution efficiency, however, it may produce solutions that are less practical from a construction point of view (even with length-scale control), potentially negating any cost-saving from solution efficiency. This is in contrast to the truss approach, which restricts the design space by requiring loads to flow in straight paths along predefined candidate orientations. Truss models, therefore, underperform continuum solutions; however, they likely improve constructability as steel rebar and strands may be placed in straight segments.

A key limitation of both topology optimization approaches as presented is the assumption of isotropic, linear elastic constitutive models. This assumption means that traditional topology optimization approaches to RC design may miss transverse tensile stresses that develop in the concrete phase as a result of load spreading, an outcome that is observed even when algorithms are implemented that use various moduli for the tension and compressive materials (Victoria et al. 2011). In some design settings, for example,

J. Struct. Eng. 2013.139:607-618.

Downloaded from ascelibrary.org by JOHN HOPKINS UNIVERSITY on 05/08/13. Copyright ASCE. For personal use only; all rights reserved.

prestressed concrete, this missing treatment of orthotropy, may lead to invalid strut-only solutions that falsely indicate that steel reinforcement is not needed. Fig. 8 illustrates this shortcoming for a concrete block subjected to a compressive load, which is representative of a column or prestressed anchorage zone. Minimum compliance solutions found using truss and continuum topology optimization are shown in Figs. 8(b and c), respectively. The topologies indicate a strictly compressive load path, failing to capture load spreading that will create transverse tensile stresses in the concrete phase as shown by the principal stress plot in Fig. 8(d) (only major stresses are shown, as all minor stresses are compressive). A similar instance can be seen over the left support in the topology-optimized truss solution for the deep beam with cutout [Fig. 5(c)].

Overcoming this limitation requires breaking from traditional linear elastic topology optimization methodologies. We propose herein a bilinear hybrid approach. The idea is that tension members are implemented as truss elements in the optimization formulation, resulting in reinforcing steel design that is straight, simply placed, and easily sized. Continuum elements form force paths consistent with the elastic stress trajectories and couple with the tensile truss members to carry compression in the concrete. This separation of the compressive and tensile load-carrying elements allows various moduli to be used for the various materials, and more importantly, is shown to capture force-spreading that results in tensile stresses orthogonal to compression struts, i.e., splitting stresses near a prestressing steel anchorage. The details of this hybrid approach are presented in the subsequent section.

Hybrid Truss-Continuum Strut-and-Tie Models

A new force visualization approach is proposed that utilizes a hybrid truss-continuum design domain to address the identified shortcomings in the prevision section, specifically the inability of the topology solutions to simulate force-spreading and the cumbersome postprocessing required to size reinforcing steel with continuum solutions. In the hybrid approach, first postulated in Moen and Guest

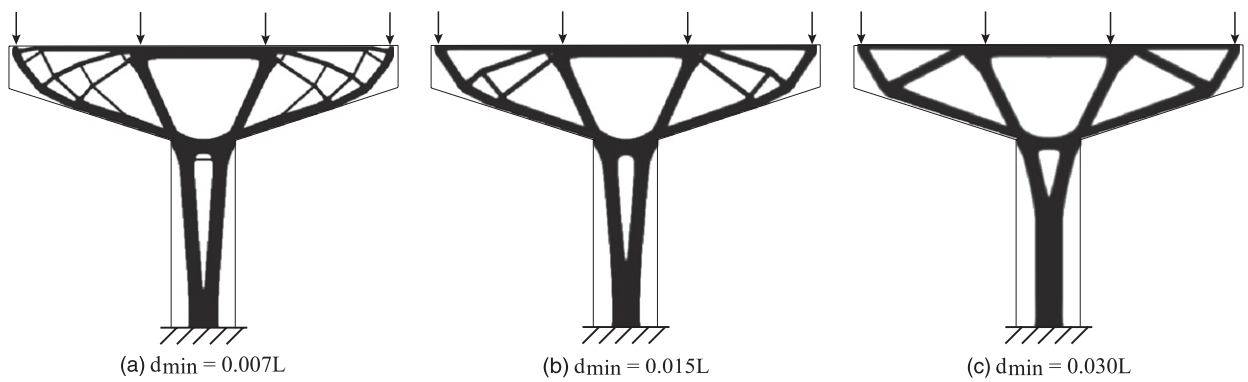

Fig. 7. Hammerhead pier example solved using continuum topology optimization with minimum prescribed length scales (diameter = d_{min}) of (a) d_{min} = 0.007L (small d_{min}); (b) d_{min} = 0.015L (medium d_{min}); and (c) d_{min} = 0.030L (large d_{min}); increasing length scale decreases efficiency but also complexity

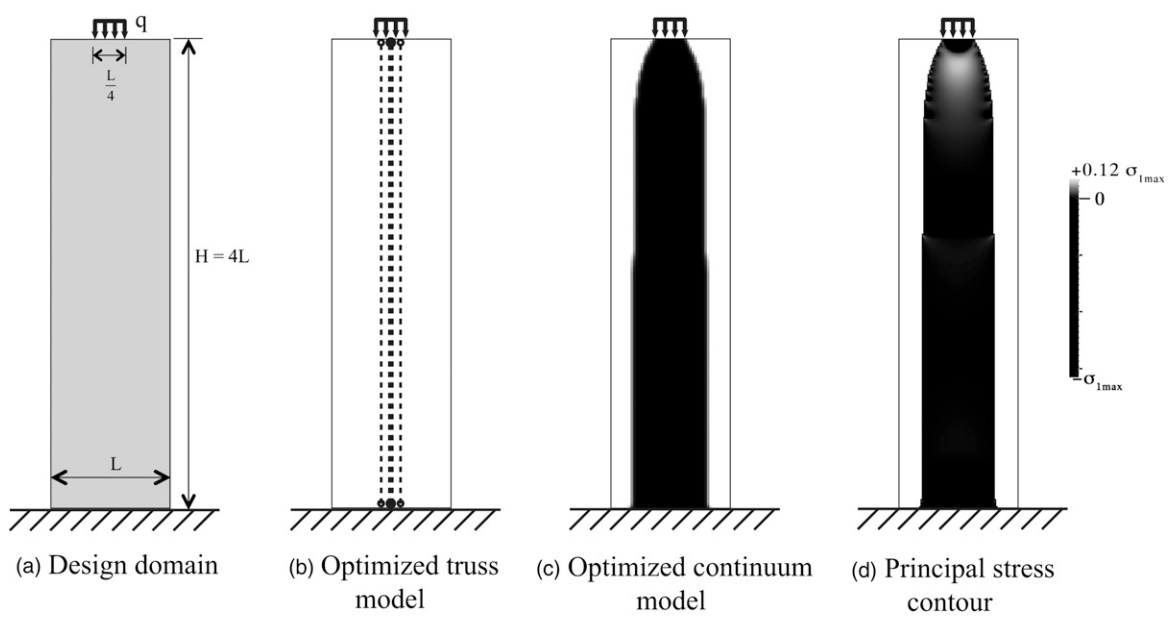

Fig. 8. Compression block illustrating strut-only solutions: (a) load and boundary conditions, (b) truss optimization producing three vertical struts, (c) continuum optimization producing single large strut; (d) strut-only solutions fail to capture tensile stresses because of force spreading, the maximum principal stress plot for solution (c)

J. Struct. Eng. 2013.139:607-618.

Downloaded from ascelibrary.org by JOHN HOPKINS UNIVERSITY on 05/08/13. Copyright ASCE. For personal use only; all rights reserved.

(2010), the steel phase is modeled using truss elements with high tensile stiffness and zero compressive stiffness, while the concrete phase is modeled using continuum elements with high compressive stiffness and low tensile stiffness. The hybrid formulation therefore requires tension load paths be carried with steel truss members and compressive load paths to be carried with continuum concrete members. This not only captures force-spreading as will be shown, it also leverages the desirable properties of both topology optimization approaches: load-carrying concrete continuum may take any topology, as it need not be constructed, while steel reinforcement is placed in straight segments.

The idea of combining discrete structural elements with continuum elements is not a new idea. Several authors have proposed using continuum topology optimization to reinforce predefined (nonoptimized) frame systems, most notably for designing topologies of lateral bracing systems (Mijar et al. 1998; Liang et al. 2000a, Stromberg et al. 2012). A key difference here is that topology optimization simultaneously optimizes the discrete element (truss) and continuum domains and leverages separation of these domains to distinguish compression and tension load paths.

Hybrid Mesh

The hybrid mesh is achieved by embedding a truss ground structure into a continuum finite element mesh. The design domain Ω is discretized with a lattice mesh of nodes and the continuum mesh Ω_c uses every node, while the truss mesh Ω_t is more sparse, with members connected every few nodes to reduce the complexity of the final steel configuration. This is seen in Fig. 9, where there are 12 continuum elements in each direction; however, the truss elements are connected every four nodes (gray = continuum elements, black = truss elements). Force transfer between the meshes occurs at the shared nodes and a nonslip condition for the steel reinforcement is assumed. This relative node spacing of four to one was selected to match approximately the truss and continuum ground structures in the preceding examples. As previously discussed, using a denser-truss ground structure (skipping fewer continuum nodes) would likely lead to more complex reinforcement patterns, while coarser-truss ground structures would likely produce simpler patterns. It is not recommended, however, that the truss node spacing be fewer than the continuum node spacing, as this would require compression truss elements to have nonzero stiffness.

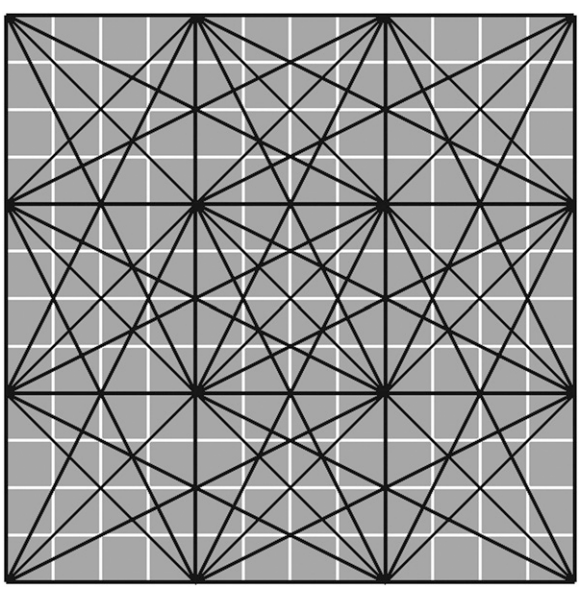

Fig. 9. Interaction between continuum (four-node quadrilaterals) and truss domains

Material Models

The bilinear stress-strain relationships for the steel and concrete are shown in Fig. 10. Young's moduli for the steel are assumed 200 GPa (29,000 ksi) in tension and zero in compression, while moduli for the concrete are assumed 24.9 GPa (3,600 ksi) in compression and 2.0 GPa (290 ksi) in tension. A nonzero tensile stiffness is used for the concrete to prevent singularities in the global stiffness matrix. Such singularities would otherwise arise at nodes that are not connected to truss elements and that are located in regions achieving a state of tensile stress.

As truss members carry only axial forces, the bilinear constitutive steel model is straightforward to implement. Denoting the truss elemental design variables (cross-sectional areas) as ρ_t, the element stiffness matrix of a truss element $\mathbf{K}_t^e$ is now stated as follows:

$$\mathbf{K}_t^e(\rho_t^e, \sigma_t^e) = (\rho_t^e)^{\eta_t}\, \mathbf{K}_{0,t}^e\left[E_t(\sigma_t^e)\right] \tag{4}$$

where E_t = Young's modulus of truss element and dependent on the sign of the elemental (axial) stress σ_t^e (Fig. 10), and $\mathbf{K}_{0,t}^e$ = truss element stiffness matrix for unit ρ_t^e.

For the concrete continuum elements, an orthotropic constitutive model is adapted from the bilinear elastic portion of a model proposed by Darwin and Pecknold (1977). The model combines the various Young's moduli as a function of the principal normal stresses and orientation of the principal stress plane. This rotational dependence is key to capturing force-spreading and gives preference over existing isotropic stress-dependent stiffness tensors proposed in the literature [e.g., Cai (2011)].

Denoting the continuum elemental design variables (volume fractions) as ρ_c, the element stiffness matrix of a continuum element $\mathbf{K}_c^e$ is now stated as

$$\begin{aligned} \mathbf{K}_c^e(\rho_c^e, \sigma_c^e) &= [(\rho_c^e)^{\eta_c} + \rho_{\min}^e] \\ \mathbf{K}_{0,c}^e[\mathbf{D}(\sigma_c^e)] &= [(\rho_c^e)^{\eta_c} + \rho_{\min}^e] \int \mathbf{B}^{e^{\mathrm{T}}}\, \mathbf{D}(\sigma_c^e)\, \mathbf{B}^e\, \mathrm{dV} \end{aligned} \tag{5}$$

where $\mathbf{D}$ = (stress-dependent) constitutive stiffness tensor relating continuum stresses $\sigma_{\mathbf{c}}$, and strains $\boldsymbol{\varepsilon}$, and $\mathbf{B}^e$ = elemental component of the standard strain-displacement tensor ($\varepsilon = \mathbf{Bd}$). Constitutive stiffness tensor $\mathbf{D}$ is defined as follows for an isotropic material with Young's modulus E and Poisson's ratio ν:

$$\mathbf{D}_{\mathrm{iso}} = \frac{E}{1-\nu^2}\begin{bmatrix} 1 & \nu & 0 \\ \nu & 1 & 0 \\ 0 & 0 & (1-\nu)/2 \end{bmatrix} \tag{6}$$

The orthotropic material model of Darwin and Pecknold (1977) is stress-dependent and uses the following approximation for the stiffness tensor, denoted as $\mathbf{D_p}$ with the subscript, p, indicating it is defined in the principal stress coordinate system:

$$\mathbf{D_p} = \begin{bmatrix} D_{11} & \nu_{\mathrm{eff}} D_{11} D_{22} & 0 \\ \nu_{\mathrm{eff}} D_{11} D_{22} & D_{22} & 0 \\ 0 & 0 & 0.25\left(D_{11} + D_{22} - 2\nu_{\mathrm{eff}}\sqrt{D_{11}D_{22}}\right) \end{bmatrix} \tag{7}$$

J. Struct. Eng. 2013.139:607-618.

Downloaded from ascelibrary.org by JOHN HOPKINS UNIVERSITY on 05/08/13. Copyright ASCE. For personal use only; all rights reserved.

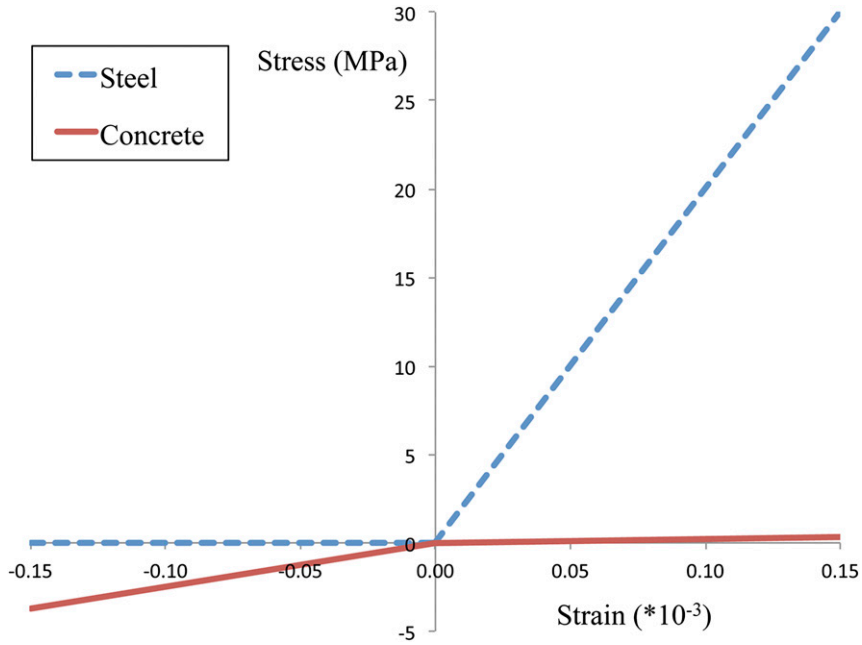

Fig. 10. Stress-strain relationships for continuum concrete and truss steel models

where ν_{eff} = effective, or smeared, Poisson's ratio, and D_{ij} terms are dependent on the principal normal stresses, σ_{ci}, for $i = 1, 2$ as follows:

$$\begin{aligned} D_{ii} &= E_{ct}, \nu_i = \nu_{ct} \quad \text{if} \quad \sigma_{ci} > 0 \\ D_{ii} &= E_{cc}, \nu_i = \nu_{cc} \quad \text{if} \quad \sigma_{ci} < 0 \\ D_{12} &= D_{21} = \nu_{\text{eff}} \sqrt{D_{11} D_{22}} \\ \nu_{\text{eff}} &= \sqrt{\nu_1 \nu_2} \end{aligned} \tag{8}$$

where E_{cc} and E_{ct} = Young's modulus of the concrete in compression and tension, respectively, and ν_{cc} and ν_{ct} = Poisson's ratio of the concrete in compression and tension, respectively. The compression Poisson's ratio of $\nu_{cc} = 0.2$ is used to compute the tensile Poisson's ratio from the following equation, which is required to achieve symmetry of $\mathbf{D_p}$ (Darwin and Pecknold 1977):

$$\nu_{ct} = \nu_{cc} E_{ct} / E_{cc} \tag{9}$$

This relationship is deemed acceptable as the stiffness, and therefore load-carrying potential, of the concrete continuum system in tension is negligible.

The principal stresses σ_i in Eq. (8) and the orientation θ of the principal plane are computed in the standard manner

$$\begin{aligned} \sigma_{1,2} &= \frac{\sigma_x + \sigma_y}{2} \pm \sqrt{\left(\frac{\sigma_x + \sigma_y}{2}\right)^2 + \tau_{xy}^2} \\ \theta &= \frac{1}{2} \tan^{-1}\left(\frac{\sigma_x - \sigma_y}{2\tau_{xy}}\right) \end{aligned} \tag{10}$$

where normal stresses σ_x and σ_y and shear stress τ_{xy} are all defined in the global coordinate system.

The constitutive stiffness tensor in Eq. (7), defined in the principal coordinate system, is then transformed to the global coordinate system using

$$\mathbf{D} = \mathbf{Q}^T \mathbf{D_p} \mathbf{Q} \tag{11}$$

where the transformation tensor $\mathbf{Q}$ is defined as

$$\mathbf{Q} = \begin{bmatrix} \cos^2(\theta) & \sin^2(\theta) & 2\cos(\theta)\sin(\theta) \\ \sin^2(\theta) & \cos^2(\theta) & -2\cos(\theta)\sin(\theta) \\ -\cos(\theta)\sin(\theta) & \cos(\theta)\sin(\theta) & \cos^2(\theta) - \sin^2(\theta) \end{bmatrix} \tag{12}$$

Optimization Formulation and Solution Algorithm

The hybrid minimum-compliance problem can now be expressed as

$$\begin{aligned} &\min_{\boldsymbol{\rho}_t, \boldsymbol{\rho}_c} f\left(\boldsymbol{\rho}_t, \boldsymbol{\rho}_c\right) = \mathbf{F}^{\mathrm{T}} \mathbf{d} \\ &\text{subject to: } \mathbf{K}(\boldsymbol{\rho}_t, \boldsymbol{\rho}_c, \boldsymbol{\sigma}_t, \boldsymbol{\sigma}_c)\mathbf{d} = \mathbf{F} \\ &\qquad \sum_{e \in \Omega_t} \rho_t^e v_t^e + \sum_{e \in \Omega_c} \rho_c^e v_c^e \le V \\ &\qquad 0 \le \rho_t^e \quad \forall\, e \in \Omega_t \\ &\qquad 0 \le \rho_c^e \le 1 \quad \forall\, e \in \Omega_c \end{aligned} \tag{13}$$

where v_t^e and v_c^e = truss element lengths and continuum element volumes, respectively (as before), and the global stiffness matrix is assembled in the standard manner

$$\mathbf{K}(\boldsymbol{\rho}_t, \boldsymbol{\rho}_c, \boldsymbol{\sigma}_t, \boldsymbol{\sigma}_c) = \mathop{\mathrm{A}}_{e \in \Omega_t} \mathbf{K}_t^e(\rho_t^e, \sigma_t^e) + \mathop{\mathrm{A}}_{e \in \Omega_c} \mathbf{K}_c^e(\rho_c^e, \sigma_c^e) \tag{14}$$

The standard projection scheme (Guest et al. 2011) is again used for the continuum elements, and thus $\boldsymbol{\rho}_c$ remain a closed-form function of $\boldsymbol{\phi}$ as before. This detail is omitted for brevity.

One of the key aspects of this hybrid technique is that the concrete and steel pull from the same prescribed volume of material. Using this approach, if a structure sees only tension forces, the optimization process will produce a truss (steel)-only structure. Likewise, if only compressive forces are present, a continuum

J. Struct. Eng. 2013.139:607-618.

Downloaded from ascelibrary.org by JOHN HOPKINS UNIVERSITY on 05/08/13. Copyright ASCE. For personal use only; all rights reserved.

(concrete)-only structure will result, although this is unlikely because of the force-spreading effect.

The equilibrium conditions are now governed by a nonlinear material model and thus require an iterative numerical solution. However, they are bilinear elastic, meaning they are not load-magnitude dependent and do not require load-stepping as in topology optimization for fully nonlinear material models, such as in Swan and Kosaka (1997), Maute et al. (1998), and Bogomolny and Amir (2012). The approach taken here is to initialize the analysis iterative process with all elements being active and isotropic (no stress dependency) and updating the stiffnesses using the material models described previously.

The optimization algorithm is summarized as follows:

1. Initialize truss and continuum design-variable fields ρ_t and ρ_c with a uniform distribution of material (or random or educated guess).
2. Finite element analysis:
   a. Solve linear elastic (stress-independent) problem $\mathbf{K}(\boldsymbol{\rho}_\mathbf{t}, \boldsymbol{\rho}_\mathbf{c})\ \mathbf{d} = \mathbf{F}$ with truss elements having $E_t = 200$ GPa and all continuum elements being isotropic with $E_c = 24.9$ GPa (i.e., all elements at full stiffness).
   b. Update truss element stiffness matrices according to Eq. (4).
   c. Update continuum-element stiffness matrices according to Eqs. (5) and (7)–(12).
   d. Solve $\mathbf{K}(\boldsymbol{\rho}_\mathbf{t}, \boldsymbol{\rho}_\mathbf{c}, \boldsymbol{\sigma}_\mathbf{t}, \boldsymbol{\sigma}_\mathbf{c})\ \mathbf{d} = \mathbf{F}$ with updated element stiffnesses.
   e. If analysis converged, go to Step 3; else, go to Step 2b.
3. Compute sensitivities using Eq. (3) and converged displacements and element stiffnesses from Step 2.
4. Update the independent design variables using a gradient-based optimizer.
5. Check optimization convergence. If converged, stop; else go to Step 2;

Convergence of the finite element analysis (Step 2*e*) is herein defined as fewer than 0.1% of truss elements changing between tension and compression states and the average change in orientation of the principal plane θ in nonvoid elements is $<0.01°$. Convergence was typically achieved in fewer than 10 finite element iterations in the presented examples. It should also be noted that the Young's moduli shown in Fig. 10 for each phase are piecewise linear and thus exhibit C^0, but not C^1, continuity. In gradient-based optimization, this typically requires interpolation between the piecewise states to achieve C^1 continuity. Interestingly, oscillatory behavior was not observed in either the analysis or optimization steps. This may be owing to the result that the design sensitivities [Eq. (3)] are always negative, indicating that adding material always improves stiffness. Interpolation of Young's moduli, however, may be required for more challenging design problems in which sensitivities may be positive or negative.

Hybrid Topology Optimization Results

The same examples presented previously are solved with the new hybrid truss-continuum topology optimization approach using the embedded mesh scheme shown in Fig. 9. The compression block example (Fig. 8) highlights the capability of the model to capture force-spreading. The optimal solution found using the hybrid topology optimization approach is shown in Fig. 11, where the white regions indicate non-load-carrying concrete, the black region indicates compressive load-carrying concrete, and lines indicate the steel ties. Under the compressive load [Fig. 11(a)], a single (large) compression strut is designed as before, however, it is now reinforced with horizontal steel truss elements to capture principal tensile stresses that develop because of force-spreading. This resembles splitting reinforcement that would be detailed in the local anchorage zone of a prestressing strand anchorage. It is also worth emphasizing that the volume constraint V is shared between the truss and continuum topologies in Eq. (14). Fig. 11(b) highlights this idea: When the same structure is subjected to a tensile load, the optimizer concentrates all available material in vertical steel ties, as the concrete does not play a role in force transfer.

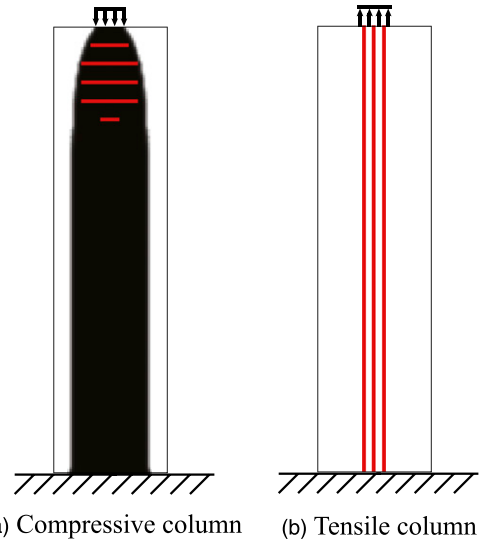

Fig. 11. (a) Compression block solution using new hybrid topology optimization algorithm; horizontal truss (steel) elements carry tensile stresses because of force spreading seen in Fig. 8(d); (b) under tensile-applied load the algorithm produces tie-only solution, illustrating that the hybrid scheme allocates material to tension (steel) and compression (concrete) constituents as needed

Fig. 12 contains solutions to the previously explored examples found using the hybrid topology optimization algorithm. The compressive and tensile load paths are indicated by the continuum and truss topologies. The compressive load paths may take any angle, vary in thickness, and connect at any location, leveraging the free-form nature of continuum topology and the idea that these members are not explicitly constructed, but rather represent an idealized load path. The tension load paths are straight and thus more accurately represent rebar and its placement, although their placement is still dependent on the truss ground structure as previously discussed. As truss members, they also allow for direct extraction of axial force and the calculation of required cross-sectional areas in design.

The simply supported beam [Fig. 12(a)] and hammerhead pier [Fig. 12(c)] solutions resemble a combination of the previously presented continuum-only and truss-only topology-optimized solutions. The tension and compression load paths are orthogonal, with load transfer occurring at the end of the truss members, typically in the interior of compressive struts. An interesting highlight of the deep beam with cutout solution [Fig. 12(b)] is the use of steel near the supports. In the truss-only topology optimization solution [Fig. 5(c)], unbraced compressive struts transfer load to the supports. In the hybrid model, lateral truss members are present in the region of the support to pick up the tensile stresses that will develop because of force-spreading at bearing. This more closely resembles the continuum solution [Fig. 5(b)], although an extra tie has been added to the lower-right side of the domain to pick up tensile stresses

J. Struct. Eng. 2013.139:607-618.

Downloaded from ascelibrary.org by JOHN HOPKINS UNIVERSITY on 05/08/13. Copyright ASCE. For personal use only; all rights reserved.

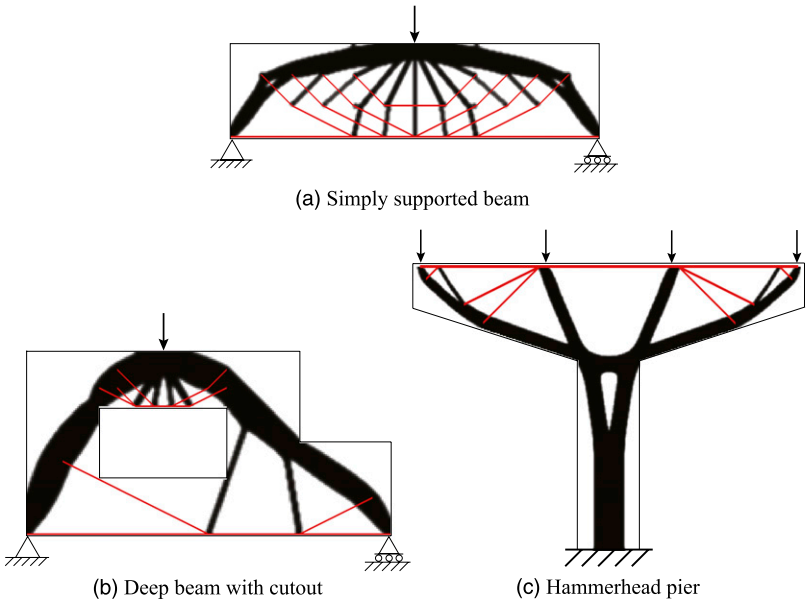

Fig. 12. Optimized topologies using new hybrid optimization algorithm: (a) simply supported beam; (b) deep beam with cutout; (c) hammerhead pier

developing as a result of the change in the thickness of the compression strut in this region.

Concluding Remarks

Topology optimization provides an effective and convenient methodology for obtaining a minimum compliance concrete truss model, i.e., a truss model in which the strain energy is minimized, a generally agreed-upon design guideline, which is intended to minimize plastic deformation at an ultimate limit state. Experiments and nonlinear finite-element modeling have confirmed that a minimum compliance concrete truss model can increase peak load and improve the load-deformation response of RC members over traditional strut-and-tie designs. However, as only elastic stiffness is considered rigorously in the optimization formulation, a designer must still check ductility and strength requirements of the selected strut-and-tie model with existing code provisions. The minimum compliance design problem is solved efficiently using gradient-based optimizers with adjoint sensitivity analysis, enabling the identification of models for complex domains, including members with holes. Results are shown to produce steel reinforcement patterns that are in line with the principal tension elastic stress trajectories.

The advantages of truss topology optimization are that steel ties are discrete and straight, yielding realistic and constructible reinforcement patterns, and that axial force demand and therefore required steel cross-sectional areas come directly out of the analysis. The disadvantages are that the optimality is limited by the initial choice of ground structure, with simpler ground structures yielding simpler, less efficient, topologies. Conversely, the free-form nature of continuum topology optimization typically enables discovery of solutions with higher efficiency. These solutions, however, tend to be more complex, potentially requiring curved rebar or rebar with varying thickness. The number of required ties, however, may be indirectly limited through the use of projection schemes for controlling minimum-length scale as shown in the hammerhead pier design problem. Continuum solutions must also be postprocessed to determine required steel areas. Neither truss nor isotropic continuum topology optimization is capable of accounting for transverse tensile stresses that may develop in compression members caused by force-spreading.

The key contribution of this work is the development of a hybrid truss-continuum topology optimization methodology that can help designers understand the flow of forces in a RC member and provide demand forces that can be used to size reinforcing steel. Bilinear material models are used to find tensile load paths represented by truss (steel) elements and compressive load paths by continuum (load-carrying concrete) elements. Rebar is therefore kept discrete and placed in straight segments, with axial-force demand directly output by the model, while the concrete load path is free to take any shape. An orthotropic bilinear material model is assumed for the concrete, requiring tensile principal stresses to be carried by the steel truss members. This is shown to capture force-spreading phenomena that traditional topology optimization approaches miss, particularly at locations of concentrated forces, such as applied loads, bearing at supports, and prestressing anchorages.

The ability to algorithmically focus natural tension and compression force flow in separate structural elements enables consideration of more complex design objectives beyond elastic stiffness, potentially enabling direct optimization for serviceability and strength in RC. Very recently, Bogomolny and Amir (2012) have provided an excellent step in this direction by optimizing for strength with elastoplastic continuum-damage models. As shown, the proposed hybrid approach allows various constitutive models to be used for the steel and concrete, which could include various yield and hardening behaviors, and potentially be extended to design for ductility and ultimate strength. The proposed approach may also be extended to other composite material systems with constituents having different properties in tension and compression.

Acknowledgments

This work was supported in part by the National Science Foundation (NSF) IGERT Program (DGE-0801471) and Grant No. CMMI-0928613. Their support is gratefully acknowledged. The authors also thank Krister Svanberg for providing the MMA optimizer code.

J. Struct. Eng. 2013.139:607-618.

Downloaded from ascelibrary.org by JOHN HOPKINS UNIVERSITY on 05/08/13. Copyright ASCE. For personal use only; all rights reserved.

References

AASHTO. (1994). *AASHTO LRFD bridge specifications*, 1st Ed., Washington, DC.

Achtziger, W. (1996). "Truss topology optimization including bar properties different for tension and compression." *Struct. Optim.*, 12(1), 63–74.

Ali, M. A., and White, R. N. (2001). "Automatic generation of truss model for optimal design of reinforced concrete structures." *ACI Struct. J.*, 98(4), 431–442.

American Concrete Institute (ACI). (2002). Building code requirements for structural concrete and commentary, *ACI 318-02*, Farmington Hills, MI.

Amir, O., and Bogomolny, M. (2011). "Topology optimization for conceptual design of reinforced concrete structures." *Proc., 9th World Congress on Structural and Multidisciplinary Optimization*, Shizuoka, Japan.

Arora, J. (1997). *Guide to structural optimization*, 90th Ed., ASCE Manuals and Reports on Engineering Practice, New York.

Bendsøe, M. P. (1989). "Optimal shape design as a material distribution problem." *Struct. Optim.*, 1, 193–202.

Bendsøe, M. P., Ben-Tal, A., and Zowe, J. (1994). "Optimization methods for truss geometry and topology design." *Struct. Optim.*, 7(3), 141–159.

Bendsøe, M. P., and Sigmund, O. (2003). *Topology optimization: Theory, methods, and applications*, Springer, Berlin, Germany.

Biondini, F., Bontempi, F., and Malerba, P. G. (1999). "Optimal strut-and-tie models in reinforced concrete structures." *CAMES*, 6(3), 279–293.

Bogomolny, M., and Amir, O. (2012). "Conceptual design of reinforced concrete structures using topology optimization with elastoplastic material modeling." *Int. J. Numer. Methods Eng.*, 90(13), 1578–1597.

Bruggi, M. (2009). "Generating strut-and-tie patterns for reinforced concrete structures using topology optimization." *Comp. Struct.*, 87(23–24), 1483–1495.

Cai, K. (2011). "A simple approach to find optimal topology of a continuum with tension-only or compression-only material." *Struct. Multidisciplin. Optim.*, 43(6), 827–835.

Canadian Standards Association (CSA) Technical Committee A23.3. (1984). *Design of concrete structures CAN3-A23.3-M84*, Canadian Standards Association, Rexdale, Ontario.

Collins, M. P., and Mitchell, D. (1980). "Shear and torsion design of prestressed and non-prestressed concrete beams." *J. Prestressed Concr. Inst.*, 25(5), 32–100.

Comité Euro-International du Béton. (1993). *CEB-FIP model code 1990*, Thomas Telford Services, Ltd, London.

Darwin, D., and Pecknold, D. A. (1977). "Nonlinear biaxial stress-strain law for concrete."*J. Engrg. Mech. Div.*, 103(2), 229–241.

Guest, J. K. (2009). "Topology optimization with multiple phase projection." *Comput. Methods Appl. Mech. Eng.*, 199(1-4), 123–135.

Guest, J. K., Asadpoure, A., and Ha, S. (2011). "Eliminating beta-continuation from Heaviside projection and density filter algorithms." *Struct. Multidisciplin. Optim.*, 44(4), 443–453.

Guest, J. K., Prevost, J. H., and Belytschko, T. (2004). "Achieving minimum length scale in topology optimization using nodal design variables and projection functions." *Int. J. Numer. Methods Eng.*, 61(2), 238–254.

Kuchma, D., Yindeesuk, S., Nagle, T., Hart, J., and Lee, H. H. (2008). "Experimental validation of strut-and-tie method for complex regions." *ACI Struct. J.*, 105(5), 578–589.

Kwak, H.-G., and Noh, S.-H. (2006). "Determination of strut-and-tie models using evolutionary structural optimization." *Eng. Structures*, 28(10), 1440–1449.

Leu, L.-J., Huang, C.-W., Chen, C.-S., and Liao, Y.-P. (2006). "Strut-and-tie design methodology for three-dimensional reinforced concrete structures." *J. Struct. Eng.*, 132(6), 929–938.

Liang, Q. Q., Xie, Y. M., and Steven, G. P. (2000a). "Optimal topology design of bracing systems for multistory steel frames." *J. Struct. Eng.*, 126(7), 823–829.

Liang, Q. Q., Xie, Y. M., and Steven, G. P. (2000b). "Topology optimization of strut-and-tie models in reinforced concrete structures using an evolutionary procedure." *ACI Struct. J.*, 97(2), 322–330.

MacGregor, J. G. (1992). *Reinforced concrete: Mechanics and design*, 2nd Ed., Prentice-Hall, Englewood Cliffs, NJ.

Marti, P. (1980). "On plastic analysis of reinforced concrete." *Rep. No. 104*, Institute of Structural Engineers, ETH, Zurich, Switzerland.

Maute, K., Schwarz, S., and Ramm, E. (1998). "Adaptive topology optimization of elastoplastic structures." *Struct. Optim.*, 15(2), 81–91.

Mijar, A. R., Swan, C. C., Arora, J. S., and Kosaka, I. (1998). "Continuum topology optimization for concept design of frame bracing systems." *J. Struct. Eng.*, 124(5), 541–550.

Moen, C. D., and Guest, J. K. (2010). "Reinforced concrete analysis and design with truss topology optimization." *Proc. of the Third Int. fib Congress and Exhibition*, Washington, D.C, 1–11.

Mörsch, E. (1909). *Concrete-steel construction*, E. P. Goodrich, translator, McGraw-Hill, New York.

Nagarajan, P., and Pillai, T. M. M. (2008). "Analysis and design of simply supported deep beams using strut and tie method." *Adv. Struct. Eng.*, 11(5), 491–499.

Ohsaki, M., and Swan, C. C. (2002). "Topology and geometry optimization of trusses and frames." *Recent advances in optimal structural design*, S. A. Burns, ed., ASCE, Reston, VA, 97–123.

Ritter, W. (1899). "Die Bauweise Hennebique." Schweizerische Bauzeitung, 33(7), 59–61.

Rozvany, G. I. N. (1996). "Some shortcomings of Michell's truss theory." *Struct. Optim.*, 12(4), 244–250.

Schlaich, J., Schaefer, K., and Jennewein, M. (1987). "Toward a consistent design of structural concrete." *PCI J.*, 32(3), 74–150.

Sigmund, O., and Petersson, J. (1998). "Numerical instabilities in topology optimization: A survey on procedures dealing with checkerboards, mesh-dependencies and local minima." *Struct. Optim.*, 16, 68–75.

Stromberg, L. L., Beghini, A., Baker, W. F., and Paulino, G. H. (2012). "Topology optimization for braced frames: Combining continuum and beam/column elements." *Eng. Struct.*, 37, 106–124.

Svanberg, K. (1987). "The method of moving asymptotoes—a new method for structural optimization." *Int. J. Numer. Methods Eng.*, 24, 359–373.

Swan, C. C., and Kosaka, O. (1997). "Voigt-Reuss topology optimization for structures with nonlinear elastic material behaviors." *Int. J. Numer. Methods Eng.*, 40(20), 3785–3814.

Victoria, M., Querin, O. M., and Martí, P. (2011). "Generation of strut-and-tie models by topology design using different material properties in tension and compression." *Struct. Multidisc. Optim. J.*, 44(2), 247–258.

Downloaded from ascelibrary.org by JOHN HOPKINS UNIVERSITY on 05/08/13. Copyright ASCE. For personal use only; all rights reserved.

View publication stats

J. Struct. Eng. 2013.139:607-618.